Top view

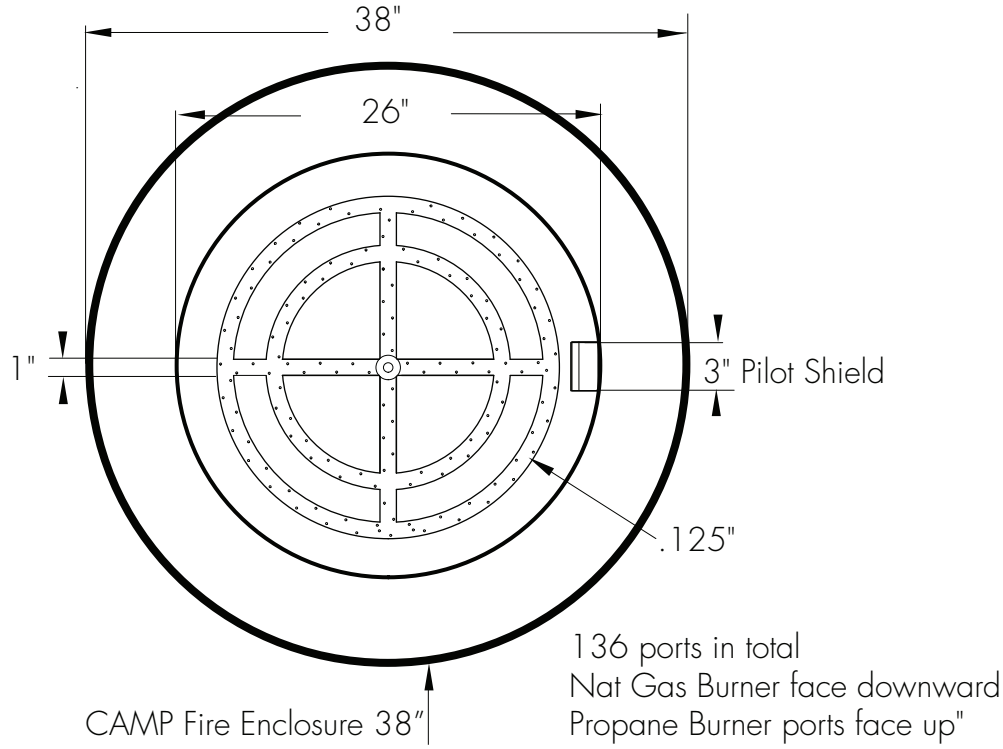

Front view

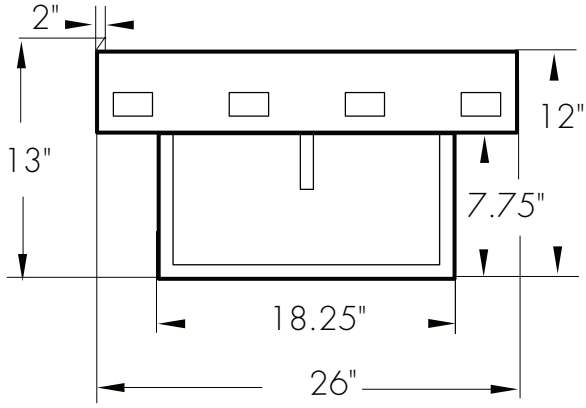

Side view

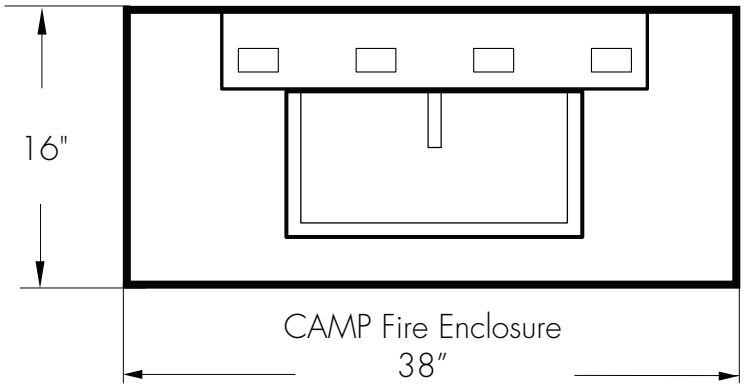

SPARK modern fires